Electromechanical Door Locks

Electromechanical Door Locks

Nexion® Electronic Keyless Lockset

General Information

The Nexion Electronic Keyless Lockset represents the next generation in home security. This stylish lockset combines the security of an automatic deadlatch with added safety features, plus the convenience of keyless operation using the Q-Key remote control.

The Nexion Keyless Entry Lockset is battery operated and emits an audible and visual confirmation of activation by the Q-Key remote control. The Q-Key has a range of up to three metres and uses the latest in encrypted rolling code technology for the highest security possible. Additional Q-Key remotes can easily be programmed by following a simple sequencing procedure. Should the Q-Key remote ever be misplaced, the lockset can be manually operated with a key.

Features

- Keyless entry using Q-Key (remote control)
- Fully encrypted rolling codes
- Safety features include **SafetyRelease** to minimise the risk of being locked in and Lockout Release
- Simple programming sequence to add or disable Q-keys and has a range of up to 3 metres
- The lockset provides both audible and visual confirmation of electronic activation, the lockset mode is shown by LockAlert

LOCKALERT®

The Nexion also has the unique Lockwood LockAlert status indicator that shows at a glance the lockset mode. The lockset can operate in three modes: Secure Mode, Safety Mode and Passage Mode.

Secure Mode

Safety Mode

Passage Mode

Secure Mode (Red) Handles securely locked from both inside and outside

Safety Mode (Yellow) Handles securely locked from outside and free from the inside

Passage Mode (Green) Handles free from both inside and outside

Standards and Compliance

S3	(Security) Australian Lock Standard (AS4145.2.1993)
D3	(Durability) Australian Lock Standard (AS4145.2.1993)
CE	CE Approved
✓	C-Tick Certified

Nexion® Electronic Keyless Lockset

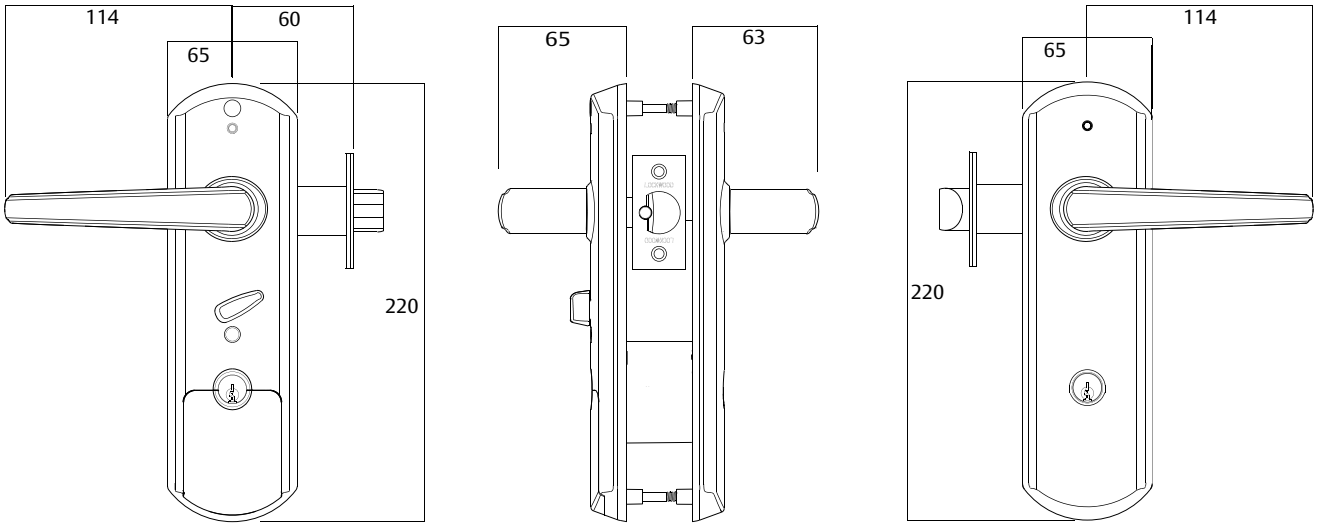

Nexion Technical Information

Case/Cover	High Purity Zinc Alloy
Backset	Standard 60mm or 70mm available on some models
Latchbolts	Stainless Steel – 15mm projection
Door Thickness	Suitable for door thickness 35 to 45mm
Cylinder	5 or 6 Pin Tumbler System
Security	S3 – High security for maximum protection (AS4145.2:1993)
Durability	D3 – High durability for maximum frequency usage
Batteries	4 AA Alkaline batteries
Standard Finishes	Gold Plated, Bright Chrome and Satin Chrome

Accessories Ordering Information

Product Description	Part Number
Q-Key Keyless Remote – Display Pack Only	NXV8/10BLKDP
Rebate Kit – Trade Pack	NX8/20###
Rebate Kit – Display Pack	NX8/20###DP
Metal Frame Strike Kit – Trade pack Only	NX8/40###
NX8/70 Latch (70mm Backset) – Trade Pack Only	NX8/70###

Note: Finishes: Bright Chrome (CP), Satin Chrome (SC) and Gold Plated finishes (GLD), ### add in finish.

Nexion Ordering Information

Series	Function	Cylinder	/	App. Option	Lever/ Knob	Finish	Options
NX	2	2	/	1	L2	CP	5KA

Series

Nexion	NX
Nexion Fire Rated*	NF

Function

Combination	1
Keyless Entry	2
Dummy	4
Accessories	8

Cylinder

Dummy No Cylinder	0
Single Cylinder	1
Double Cylinder	2

Application Options

Timber Frame Strike	1
Metal Frame Strike	3

Knob/Lever Style

Crown	K1
Sphere	K2
Summit	L1
Spire	L2
Hakea	28
Acacia	29
Saltbush	34
Mulga	36
Gidgee	37

Finish

Gold	GLD
Bright Chrome	CP
Satin Chrome	SC

Options

Trade Pack unless otherwise stated

Display Packs	DP
Special Keying – Residential	5KA
Key-Alike 5P	6KA
Key-Alike 6P	5PK
Project Keying 5P	6PK
Project Keying 6P	5RP

For other keying options contact Lockwood Sales Office.

For product availability please refer to the current price list, contact customer service or your local sales office.

Electromechanical Door Locks

Nexion® Electronic Keyless Lockset

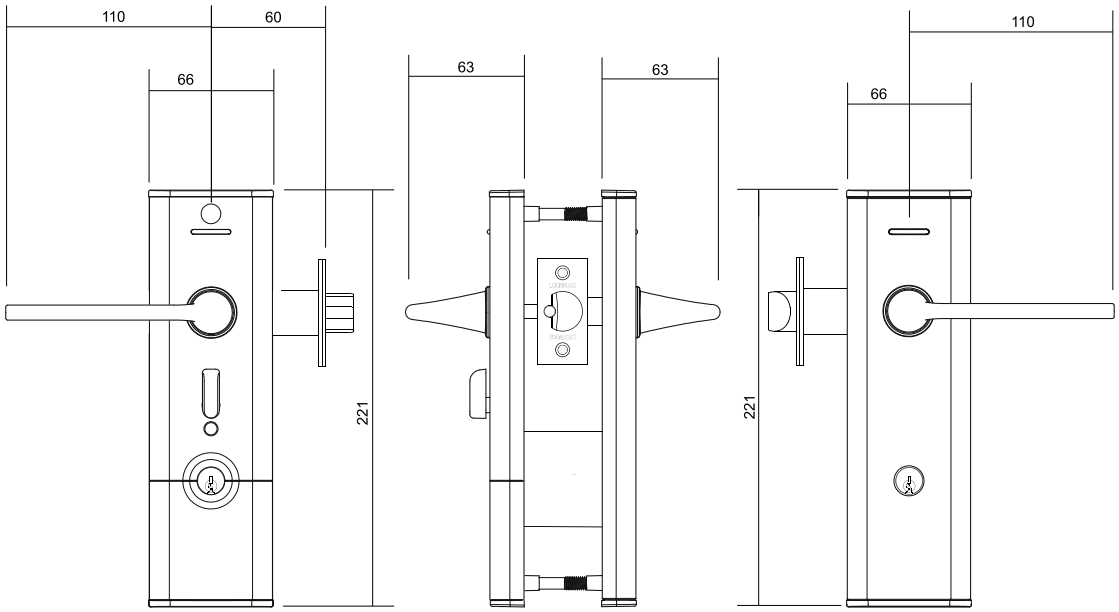

Nexion Technical Information

Case/Cover	High Purity Zinc Alloy
Backset	Standard 60mm or 70mm available on some models
Latchbolts	Stainless Steel – 15mm projection
Door Thickness	Suitable for door thickness 35 to 45mm
Cylinder	5 or 6 Pin Tumbler System
Security	S3 – High security for maximum protection (AS4145.2:1993)
Durability	D3 – High durability for maximum frequency usage
Batteries	4 AA Alkaline batteries
Standard Finishes	Gold Plated, Bright Chrome and Satin Chrome

Accessories Ordering Information

Product Description	Part Number
Q-Key Keyless Remote – Display pack Only	NXV8/10BLKDP
Rebate Kit – Trade Pack	NX8/20###
Rebate Kit – Display Pack	NX8/20###DP
Metal Frame Strike Kit – Trade pack Only	NX8/40###
NX8/70 Latch (70mm Backset) – Trade Pack Only	NX8/70###

Note: Finishes: Bright Chrome (CP), Satin Chrome (SC) and Gold Plated finishes (GLD). ### add in finish.

Nexion Ordering Information

Series	Function	Cylinder		App. Option	Lever/ Knob	Finish	Options
NXV	2	2	/	1	L2	CP	5KA

Series

Nexion	NXV

Function

Combination	1
Keyless Entry	2
Dummy	4
Accessories	8

Cylinder

Double Cylinder	2

Application Options

Timber Frame Strike	1
Metal Frame Strike	3

Knob/Lever Style

Summit	L1
Spire	L2
Element	L3
Glide	L4
Aria	27
Hakea	28
Acacia	29
Saltbush	34
Mulga	36
Gidgee	37

Finish

Bright Chrome	CP
Satin Chrome	SC

Options

Trade Pack unless otherwise stated

Display Packs	DP
Special Keying – Residential	5KA
Key-Alike 5P	6KA
Key-Alike 6P	5PK
Project Keying 5P	6PK
Project Keying 6P	5RP

For other keying options contact Lockwood Sales Office

For product availability please refer to the current price list, contact customer service or your local sales office.

001Touch™ Keyless Electronic Deadlatch

General Description

For 30 years Lockwood's iconic 001 has been securing homes in Australia. The 001 as we know it today has now become digital. As with the original product, the 001Touch™ uses the 001 Deadlatch to secure the door internally however, the external cylinder has been replaced with a stylish digital touch screen keypad. The ability to use a pin code or key card offers a convenient keyless solution.

Key Features

Touch screen Keypad
The touch screen keypad has no mechanical buttons which means no trace of your secret pin code.

4-12 Digit pin code
Choose a pin code from 4 – 12 digits, this could be ideal for children or occupants that loose keys on a regular basis.

Key Cards
Program up to 20 Key cards into your lock and have the ability to remove them individually.

Tested in accordance with AS4145.2-2008
The 001Touch has been tested in accordance with the Australian lock standard. Please refer to website for more information.

Secure Mode
You have the option to lock the 001Touch with the internal key, the key card and pin number automatically unlocks upon entry. This safety Release function minimise the chance being locked inside your house.

Low power consumption
Unlock your door up to 10,000 times with one set of 4 x AA batteries. We recommend the batteries are changed every 12 months regardless.

Outdoor weather resistant keypad
The Keypad is designed to withstand most weather conditions.

Master code
You will have the ability as a Master to add and delete users.

User code that expires
You have the ability to program a code that may last from 3 – 336 hours. This is ideal when a tradesman requires access to your house for a few hours or when your neighbour is looking after your home for up to 2 weeks and the duration you would like it to last.

Cryptic code function
Prevent others from identifying your pin code during access, the cryptic code function confuses the onlooker but at the same time allows you to still gain entry.

User codes and setting remain if batteries are removed
The settings, codes and key cards will remain programmed in the lock in the event the are batteries depleted.

Automatic Locking
Once the correct code or key card is presented, the lock will remain unlocked for 5 seconds and will lock automatically when the 5 seconds expire.

Visual guide for programming
For added convenience, a light guide will assist in the programming of some key features.
(Refer installation guide)

001Touch™ Keyless Electronic Deadlatch

Low battery
When your battery reaches critical level (30%) a warning light will come on reminding you to change the battery.

Battery check function
The battery level can be checked without removing the batteries. With a simple sequence of buttons you can tell if your battery level is between 100% - 30% .

Emergency battery connection
In the event your battery goes flat you have two battery contact points that fit a standard 9V battery, you can place the battery here and power the lock temporarily to enter your pin or key card.

Keypad Case

High purity zinc alloy

Battery cover

High Quality ABS plastic

Backset

60mm

Latch

Stainless steel 18mm projection

Door thickness

35 – 50mm

Cylinder

Only internal cylinder is present. External cylinder is replaced with a keypad and there is no key override

Finishes

Chrome plate CP

Description	Part Number
001Touch Chrome	001T-1K1CPDP
Keycard	RFKC10
Keyfob	RFKF10

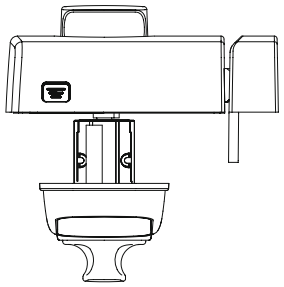

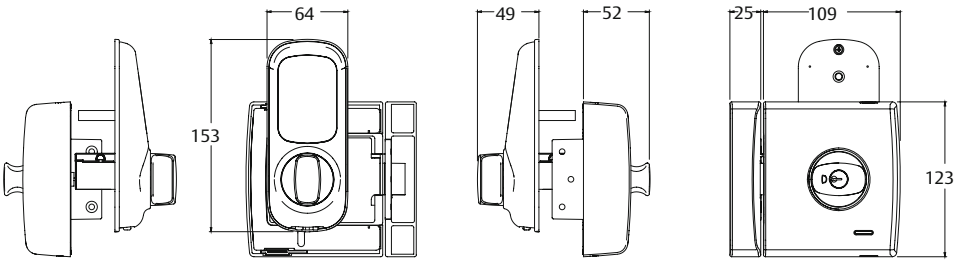

For product availability please refer to the current price list, contact customer service or your local sales office.

Keyless Digital Deadbolt

General Description

Lockwood offers innovation in door locking solutions with the Keyless Digital Deadbolt. Ideal for use on new doors or as a replacement on an existing door lock on your home, the Keyless Digital Deadbolt is also suitable for internal and light commercial doors such as storerooms and shop fronts.

The Lockwood Keyless Digital Deadbolt offers you flexibility with the use of a master pin code, 20 user codes and a visitor code that can be valid for up to two weeks. It also has a weather resistant keypad, low battery warning, key override for emergencies and many more features for your safety and convenience.

Key Features

Touch screen Keypad
The touch screen keypad has no mechanical buttons which means no trace of your secret pin code.

Pin Code Allowance
One master pin code will manage up to twenty user pin codes.

Cryptic Code Function
Prevent others from identifying your pin code during access. The cryptic code function confuses the onlooker but at the same time allows you to still gain entry.

Visual Guide for Programming
For added convenience, a light guide will assist in the programming of your lock.
(Refer to the programming guide)

Low Battery Warning
When battery power is below 30%, the low battery icon will begin flashing. If battery power is completely lost, use the key override.

Emergency Key Override
In the event your battery goes flat you have a key override that will prevent you from being locked out. Remember to always keep your keys in a safe and convenient place.

User Code that Expires
You have the ability to program a code that may last from 3 hours to 2 weeks. This is ideal when a tradesman requires access to your house for a few hours or when your neighbour is looking after your home.

LEDDB/SCYL/SIL

User codes and setting remain if batteries are removed
The settings and codes will remain programmed in the lock in the event that batteries are depleted.

Code Lockout Settings
Privacy mode allows you to deactivate the keypad from the inside providing a secure environment from others who may have pin code access.

By using your master pin, you can also restrict all user pin access. (Refer to the programming guide)

Weather Resistant Keypad

Electromechanical Door Locks
Keyless Digital Deadbolt

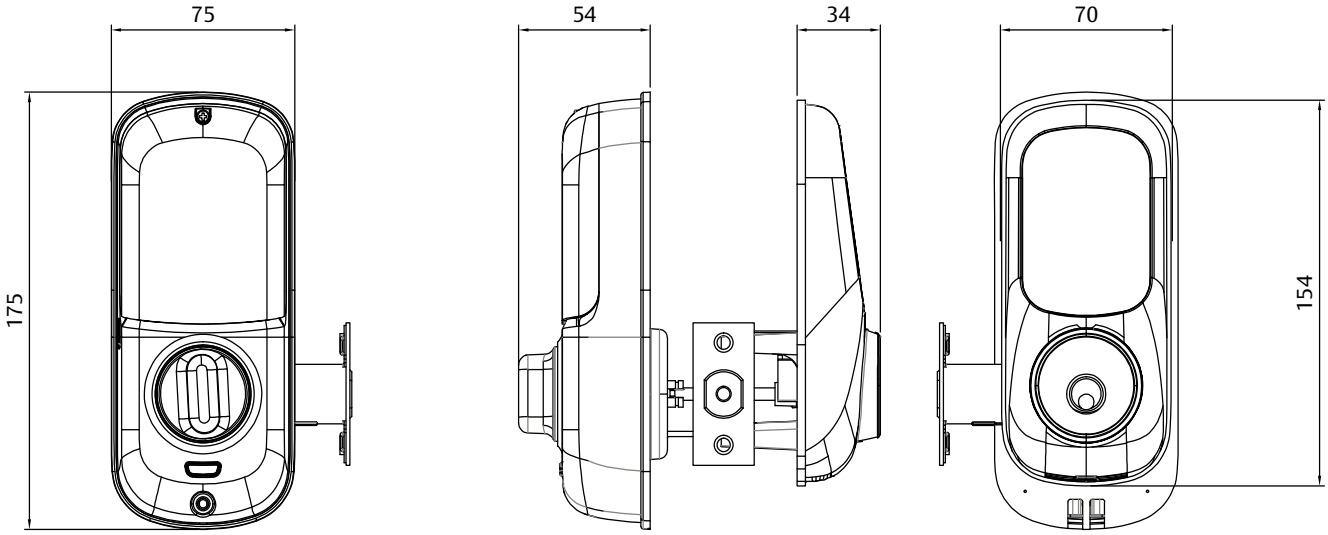

Finishes	Description	Part Number
Silver	LW Keyless Digital Deadbolt Touchpad	LEDDB/SCYL/SIL

Keyless Digital Deadbolt Technical Information	
Installation	25.4mm latch hole and 54mm lock hole
Front & Back Escutcheon	High purity zinc alloy
Back Plate	Hardened steel
Backset	Adjustable 60mm or 70mm
Bolt	Zinc alloy 25mm projection
Internal thin doors	Plastic gasket (32mm-36mm)
External thick doors	Rubber weather resistant gasket (37mm - 50mm)

Lockwood recommends the use of 4 x AA alkaline batteries.

ASSA ABLOY is the global leader in door opening solutions, dedicated to satisfying end-user needs for security, safety and convenience

LOCKWOOD

ASSA ABLOY

LOCKWOOD

Lockwood is the leading brand in the Australian locking industry. With an established reputation for high quality products, this iconic brand provides a wide range of locking solutions to residential housing, commercial building and industrial application markets. Lockwood is supported by an extensive distribution and after-sales support network. Our customers include retailers, architects, trade and industrial personnel, locksmiths and security dealers.

ASSA ABLOY

ASSA ABLOY is the global leader in door opening solutions, dedicated to satisfying end-user needs for security, safety and convenience.

ASSA ABLOY is represented in all major regions, in both mature and emerging markets, with leading positions in Australia, Europe and North America.

As the world's leading lock group, ASSA ABLOY offers a more complete product range of door opening solutions than any other company in the market.

Australia
1300 LOCK UP (1300 562 587)
lockweb.com.au

New Zealand
Telephone +64 9415 7111
assaabloy.co.nz

ASSA ABLOY Australia Pty Ltd
235 Huntingdale Road
Oakleigh, Victoria, 3166
Australia

info.au@assaabloy.com
assaabloy.com.au

ASSA ABLOY New Zealand Ltd
6 Armstrong Road
Albany, North Shore City, 0632
New Zealand

info.nz@assaabloy.com
assaabloy.co.nz

PLEASE RECYCLE THIS PACKAGING

ASSA ABLOY Australia Pty Limited ABN 90 086 451 907 ©2012